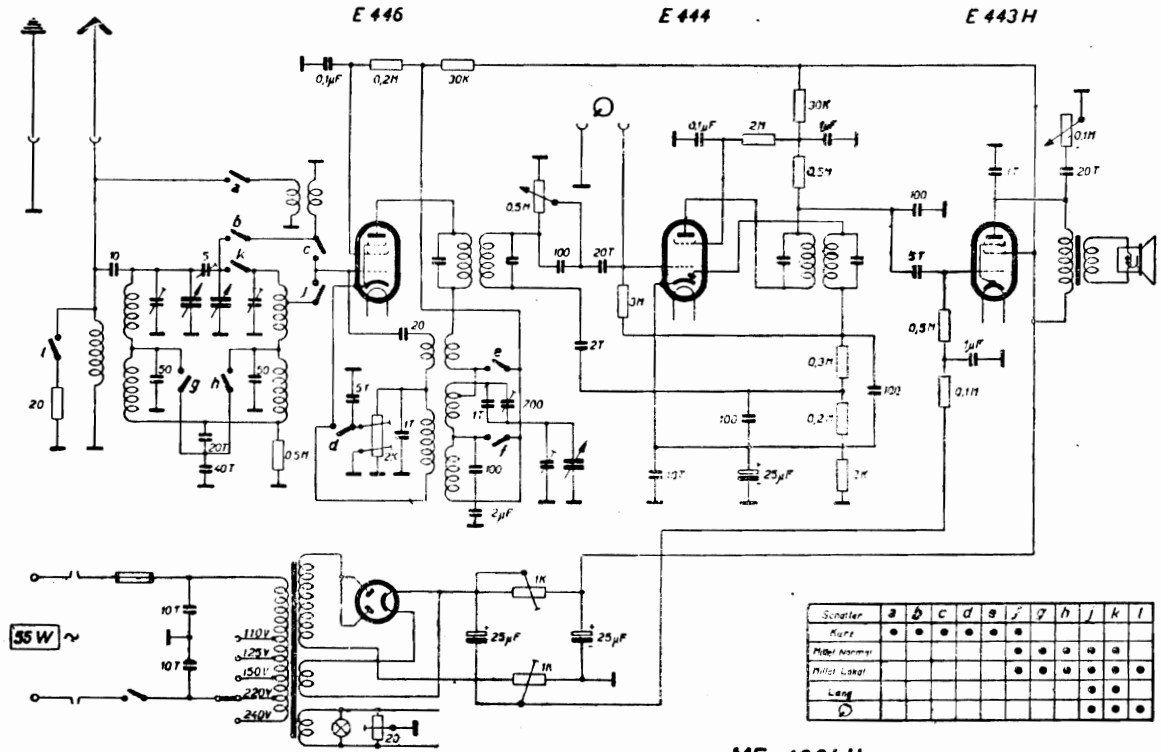

Schalter	a	b	c	d	e	f	g	h	j	k	l
Kurz	●	●	●	●	●	●					
Mittel Normal						●	●	●	●	●	
Mittel Lokal						●	●	●	●	●	●
Lang									●	●	
⌀									●	●	●

MF = 128 kHz

Horny Trix Pentode W