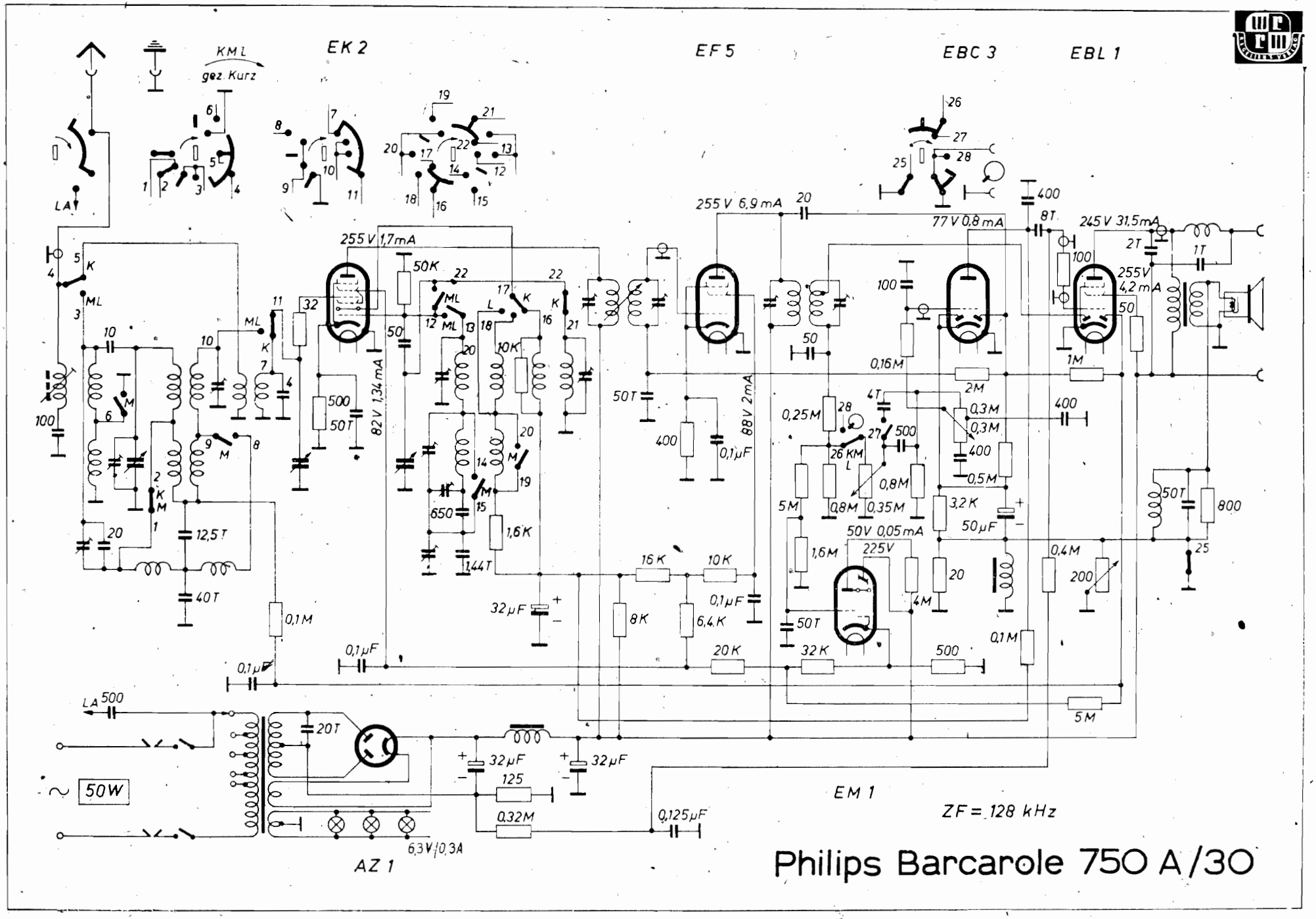

Philips Barcarole 750 A/30