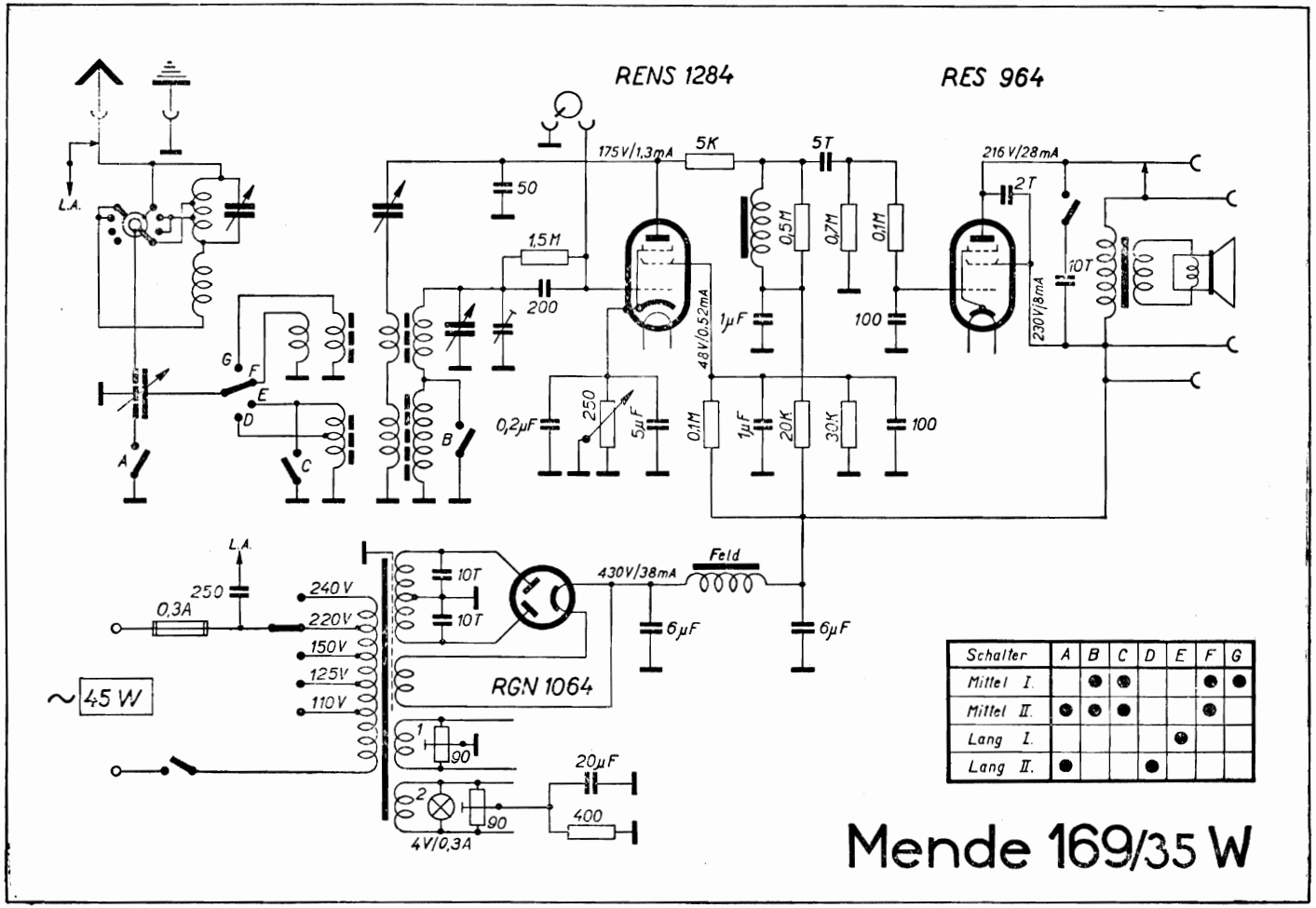

Schalter	A	B	C	D	E	F	G
Mittel I.		●	●			●	●
Mittel II.	●	●	●			●	
Lang I.					●		
Lang II.	●			●			