Archief RadioDatabase.nl
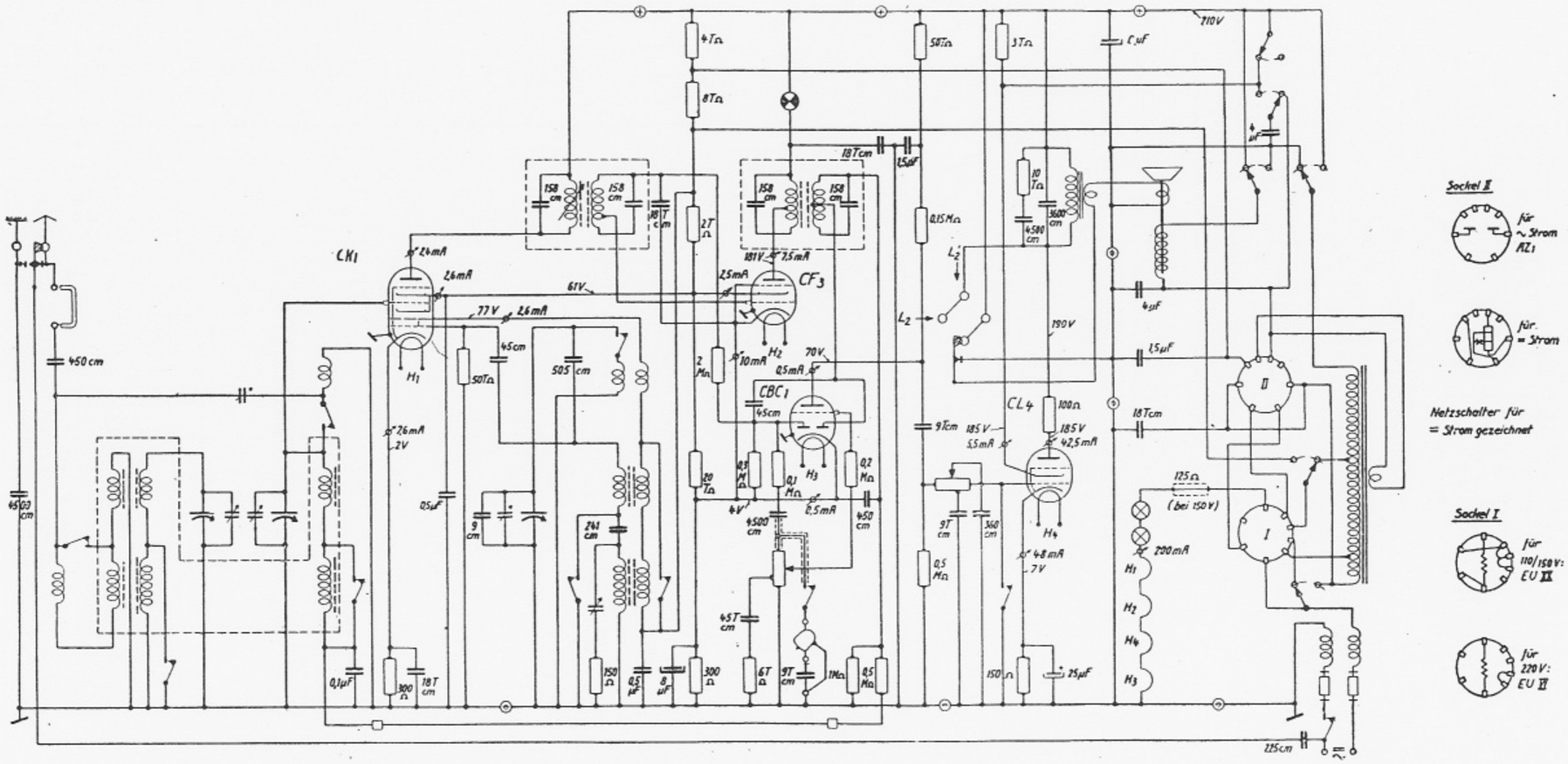
T 664 GWK